Custers Hydraulica B.V.

Assembly and User Manual
CUSTERS® Foldy Folding Scaffold

Maximum load: 200 kg/m^2

Maximum platform height: 1.8 meter

9505770002EN **March 2022**

Safe access

Smakterweg 33, 5804 AE Venray • +31 (0)478 55 30 00 • info@custers.nl • www.custers.nl
IBAN: NL37 INGB 0652 0878 68 • BIC: INGBNL2A • KvK Limburg: 12017311 • BTW nr.: NL004225958B01

Contents

1. Introduction 3
2. Specifications 4
3. Warranty and Liability 4
4. Coding of Scaffold Components 5
5. Delivery Inspection 5
6. Safety Instructions 5
   6.1. Pre-Assembly Inspection 5
   6.2. Personal Protective Equipment and Tools 5
   6.3. Assembly 6
   6.4. Hoisting Components 6
   6.5. Outriggers 7
   6.6. Guardrails 7
7. Assembly instruction 8
   7.1. Folding Scaffold – 0.8 m Platform Height 8
   7.2. Folding Scaffold – 1.8 m Platform Height with Foldy End Guardrails 10
   7.3. Folding Scaffold – 1.8 m Platform Height with Foldy Folding Guardrail 12
8. Use of the folding scaffold 14
9. Moving the folding scaffold 15
10. Maintenance of the folding scaffold 15
11. Guidelines for Use, Transport and Storage 16
12. Assembly Table 17

1. Introduction

The Custers Foldy folding scaffold is included in an extensive array of aluminum scaffold options.
Provided the Custers Folding Scaffold adheres to the EN 1004 standard, contingent upon its assembly in accordance with this manual.

The folding scaffold is offered in the following three variations:
- Folding scaffold platform height: 0.8 meters
- Folding scaffold featuring end railings, with a platform height of 1.8 meters.
- Folding scaffold featuring a collapsible handrail, with a platform height of 1.8 meters.

This manual is designed to guide you through the step-by-step process of assembling your folding scaffold with ease and safety. Improper assembly may present risks to the user. Please read the safety instructions thoroughly prior to assembly. Only individuals with experience and expertise should undertake the assembly and disassembly.

The user is accountable for ensuring that the manual is available at the site where the scaffolding is erected and utilized, as well as with the individual overseeing the work.

If any uncertainties arise regarding this manual, please contact your supplier and/or the manufacturer.

Manufacturer:

Custers Hydraulica B.V.
Smakterweg 33
5804 AE Venray The Nederlands
Telephone: +31 (0) 478 553 000
E-mail: info@custers.nl
Website: www.custers.nl

Supplier:

2. Specifications

Standard:	NEN-EN 1004
Scaffold Class:	3
Maximum Load:	200 kg/m²
Maximum Platform Height:	1.8 m
Maximum Wind Load:	6 Beaufort
Maximum Number of Load-Bearing Platforms:	1
Minimum Number of Persons for Assembly:	1

3. Warranty and Liability

Custers provides a warranty for material and manufacturing defects up to 12 months after delivery. The warranty covers the correction of such defects at our expense, or—at our sole discretion—the complete or partial return of the delivered products and replacement by a new delivery.

If products are replaced in fulfilment of our warranty obligations, the replaced products become our property. All costs exceeding the obligations described above shall be borne by the customer. When products are supplied for processing, repair, or similar work, warranty is limited solely to the proper execution of the assigned work.

Our liability does not apply:

a. If the defects result from improper use or from causes other than material or manufacturing faults.
b. If the cause of the defects cannot be clearly demonstrated.
c. If all instructions for the use of the products, including the guidelines provided in this manual, have not been strictly and fully followed.

The manufacturer's liability does not apply if the purchaser, on their own initiative, performs or has third parties perform modifications and/or repairs on the delivered products.

4. Coding of Scaffold Components

- Every aluminum/plastic cast component of the folding scaffold is marked with the Custers company name and a two-digit production year code..
- The platforms are equipped with the mandatory weather-resistant label indicating the scaffold class and referring to the assembly instructions..

5. Delivery Inspection

Upon receipt, verify that the folding scaffold has been delivered complete and undamaged. Immediately contact your supplier if any components of the scaffold are found to be damaged or if the delivery is incomplete.

6. Safety Instructions

6.1. Pre-Assembly Inspection

Verify that the assemblers are sufficiently qualified and ensure that the location where the scaffold will be erected is safe and suitable.

Pay attention to the following:
- The ground must be sufficiently load-bearing and level.
- The area must be free of obstacles both at ground level and overhead.
- Check whether the wind conditions allow safe operation of the scaffold.
- Ensure that all components and any ropes required for hoisting are present at the worksite.
- Damaged, incorrect, or non-original components must never be used.

6.2. Personal Protective Equipment and Tools

- Always wear work gloves, safety shoes, and a safety helmet.
- Use a sturdy rope for manually hoisting components or tools.
- Attaching personal fall protection to the scaffold is not permitted.
  (If fall protection is required, use the adjacent façade or another solid building structure.)

6.3. Assembly

The assembly of the folding scaffold is described in the assembly instructions. The folding scaffold can be assembled by one person.

The folding scaffold must be positioned on a level surface. The castors must always be locked, except during relocation. The platforms must be secured by sliding the locking pawl of the wind-lock device underneath the rung. The frames must be mutually secured using the locking pin. The second brace frame from the bottom is mounted onto the uprights in such a way that the openings of the claws face outward.

For platform heights up to 1 meter, the folding scaffold must be equipped with a hip-height guardrail on both sides. As a basic configuration, it is recommended to install toe boards on three sides. If a user's risk assessment demonstrates that, in the specific situation, omitting toe boards does not pose a risk to the user or the surroundings, this recommendation may be deviated from.

For platform heights from 1 meter and above, the working platform must be equipped with a trapdoor. The working platform must also be fitted with four toe boards. In addition, the folding scaffold must be equipped with both knee rails and hip-height guardrails on all sides.

	Platform Height < 1m	Platform Height > 1m
Hip guardrail	Yes, all sides	
Knee guardrail	Yes, 3 sides	Yes, all sides
Toe board	3 sides, unless a risk assessment has been carried out	Yes, all sides
Access to platform	From seated position	Via the platform hatch

6.4. Hoisting Components

Hoisting components to higher levels must be carried out by passing the components upward from one level to the next. Hoisting equipment must not be attached to the folding scaffold.

6.5. Outriggers

The outriggers prescribed in the table must always be installed as soon as the lowest section of the scaffold has been assembled.

Freestanding

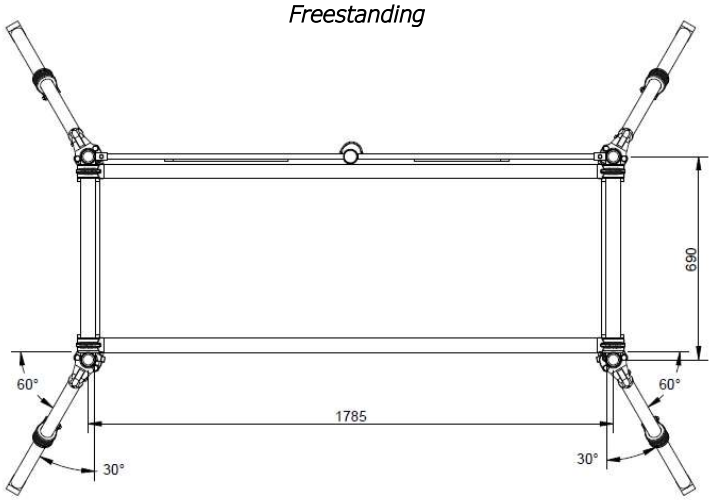

Against façade

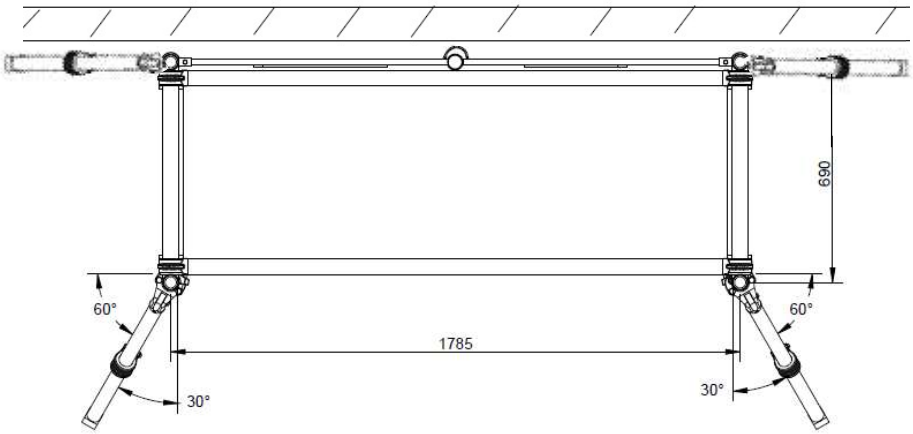

6.6. Guardrails

To prevent fall hazards during the assembly and disassembly of the mobile scaffold, hip and knee guardrails must be in place before the platform is accessed. The installer must sit on the edge of the platform hatch opening to mount the guardrails.
Only after the guardrails have been installed may the platform be entered.

7. Assembly instruction

7.1. Folding Scaffold – 0.8 m Platform Height

1. Unfold the folding frame and secure the rotating section using a locking clip.
2. Place the platform (without hatch) and slide the wind-lock under the rung.

3. Install the 4 outriggers. Ensure that the outriggers are properly supported on the ground.
4. Install the two horizontal guardrails on the top rung.
5. If the risk assessment indicates that there is a potential hazard for people around the scaffold due to falling objects, ensure that toe boards are installed on 3 sides of the platform.

7.2. Folding Scaffold – 1.8 m Platform Height with Foldy End Guardrails

1. Unfold the folding frame and secure the rotating section using a locking clip.
2. Place the platform with hatch and slide the wind-lock under the rung.

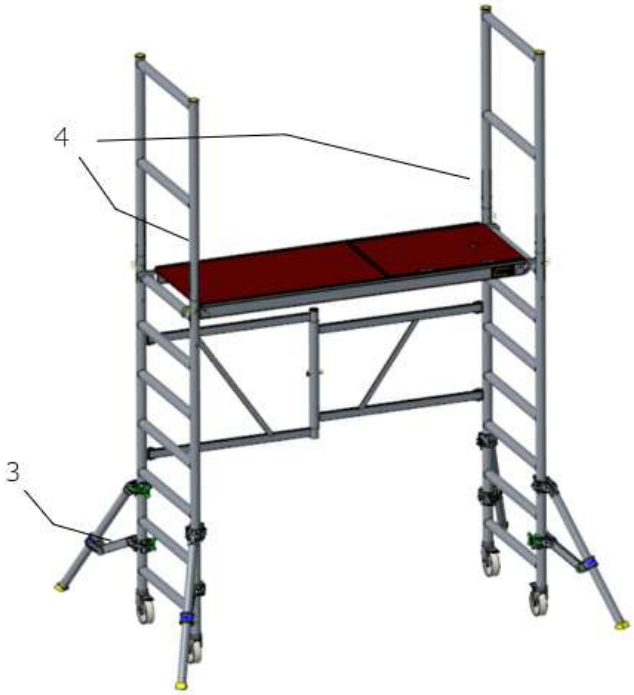

3. Install the 4 outriggers. Ensure that the outriggers are properly supported on the ground.
4. Sitting in the open hatch, place the two Foldy end guardrails and secure them using locking clips.

5. Install the 4 horizontal guardrails between the two rungs of the end guardrail. You may now stand on the platform.

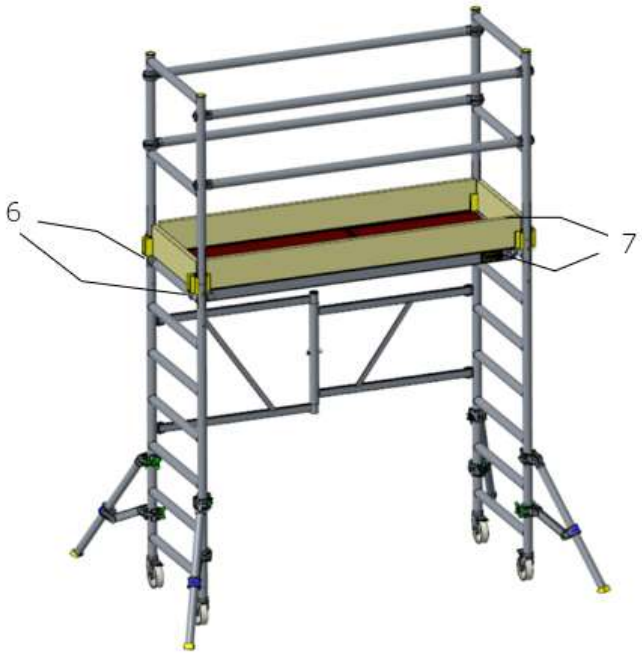

6. Install the 4 toe board holders.
7. Install the two end toe boards and the two long toe boards.

7.3. Folding Scaffold – 1.8 m Platform Height with Foldy Folding Guardrail

1. Unfold the folding frame and secure the rotating section using a locking clip.
2. P Place the platform with hatch and slide the wind-lock under the rung.

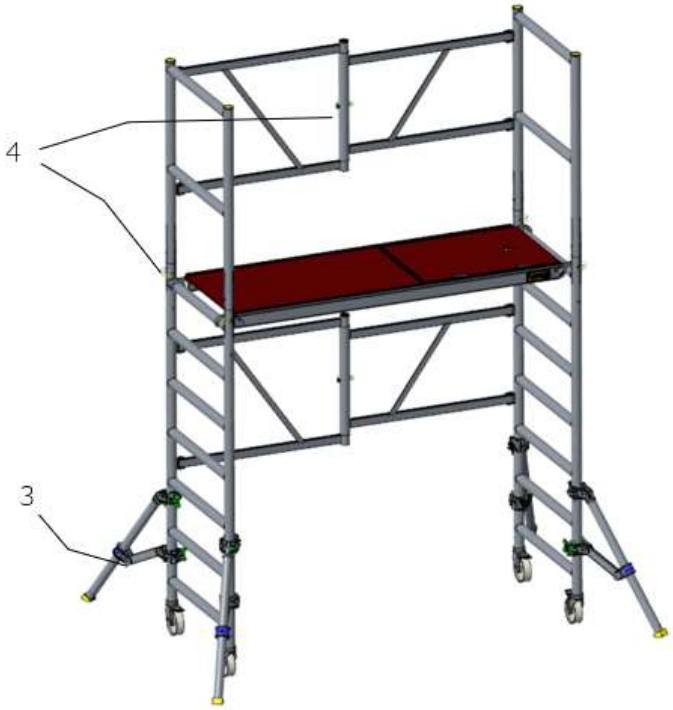

3. Install the 4 outriggers. Ensure that the outriggers are properly supported on the ground.
4. Sitting in the open hatch, place the two Foldy end guardrails and secure them using locking clips.

5. Install the 4 horizontal guardrails between the two rungs of the end guardrail. You may now stand on the platform.

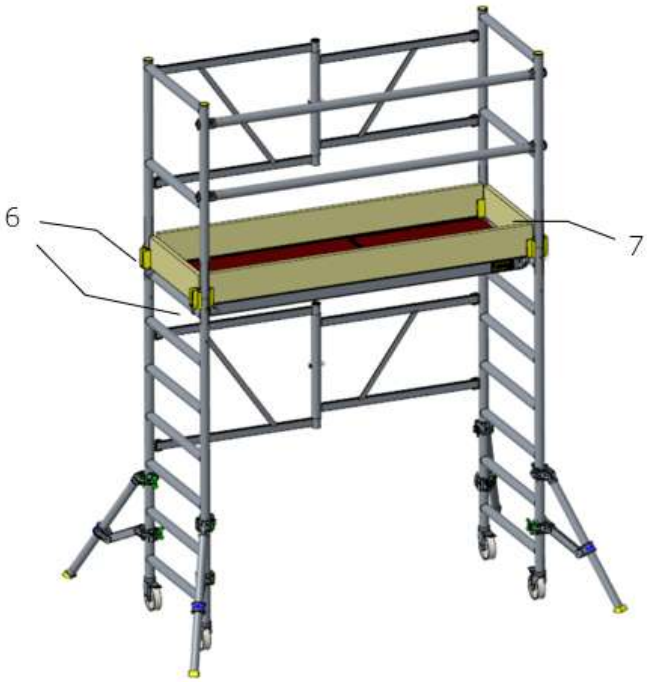

6. Install the 4 toe board holders.
7. Install the two end toe boards and the two long toe boards.

8. Use of the folding scaffold

Before each use, the following must be checked:

- De basis The base of the folding scaffold (including outriggers and wheel braking function) is correct.
- The complete structure is correct and fully assembled.
- No changes in circumstances have occurred that may affect the safe use of the scaffold.

A mobile scaffold is intended to provide access to a workplace; it is not permitted to use the scaffold as a stair tower for other structures.
It is likewise not permitted to use the scaffold as a suspended scaffold, for cantilevered working platforms, or to step over onto other structures.
No bridging may be made between a folding scaffold and a building.
No bridging may be made between folding scaffolds, unless specifically designed and calculated components are used.
The maximum working load is 200 kg/m² (scaffold class 3); only one level per scaffold may be fully loaded.
Jumping on the platforms is prohibited; the platform hatch must always be closed except during climbing up or down.

The maximum platform height is 1.8 meters.

The scaffold may only be climbed from the inside, via the frames.
Do not place boxes, ladders, or other aids on the working platform to gain additional height. It is prohibited to work on the scaffold when the wind force exceeds 6 Beaufort (large branches move, umbrellas invert, wind speed 11–14 m/s ≈ 45 km/h).
If wind force greater than 6 Beaufort is expected, the freestanding mobile scaffold must be dismantled, moved to a wind-protected area, or anchored. This must also be done when the scaffold is not in use. Beware of building openings, unclad structures, and building corners that may cause additional wind loads.
Note: When applying horizontal forces (e.g. drilling), which may push the scaffold away from a structure, the maximum horizontal load is 300 N.
Horizontals, guardrails, knee rails, and diagonals may not be used as steps.
It is prohibited to attach wind-catching surfaces such as advertising boards or tarpaulins to freestanding scaffolds. The scaffold must not be exposed to aggressive liquids or gases.

9. Moving the folding scaffold

The scaffold may only be moved manually, from the ground, and in the longitudinal direction.
During movement, normal walking speed must not be exceeded, and no persons or materials may be present on the scaffold.
During movement, pay attention to obstacles both on the ground and overhead.
The scaffold must not be moved when wind force exceeds Beaufort 4 (dust, sand, and paper are lifted; small branches break; wind speed 4–6 m/s ≈ 18 km/h).
Use caution when moving the scaffold over unsuitable surfaces (slopes, insufficient load-bearing capacity, holes, etc.). Ensure that the wheels are braked or released at the correct moments.
When moving the scaffold, the support points of the outriggers may be lifted only a few centimeters from the ground.
After movement, the support points must be returned to the ground so that they just make contact and provide support.

10. Maintenance of the folding scaffold

All components, especially moving parts and welds, must be inspected regularly—at least once per year—for wear and damage. Missing or damaged components must be replaced.

Aluminium components may no longer be used in the following cases:

- If round tubes have one or more dull dents deeper than 3.0 mm.
- If round tubes have one or more dents directly adjacent to a weld, regardless of depth or shape.
- If square/rectangular tubes have one or more dull dents deeper than 2.0 mm.
- If tubes or box sections have one or more sharp dents or cracks, regardless of length, depth, or location

Moving parts, including wheels, must be clean and run smoothly.
Repairs to scaffold components must always be carried out in consultation with the manufacturer.

11. Guidelines for Use, Transport and Storage

Scaffold components must be handled and transported with care to prevent damage.

- Storage must be arranged in such a way that only undamaged components, in the correct quantities, are available for assembly of the scaffold.
- All components must be inspected prior to assembly to ensure proper functioning and to verify that they are free from contamination or damage.
- Damaged components must not be used and must be replaced or submitted to the supplier for inspection/evaluation.
- No tools may be used during assembly or disassembly of the mobile scaffold.
- Scaffolds intended for professional use must be inspected annually by an authorized body or certified inspector.
- After exposure to extreme forces such as storms, the scaffold must be re-inspected before being put back into service.
- Hoisting or suspending the scaffold is not permitted.

12. Assembly Table

The following table specifies which components are required for assembling a folding scaffold up to a given height.
Ensure that all listed components are present.

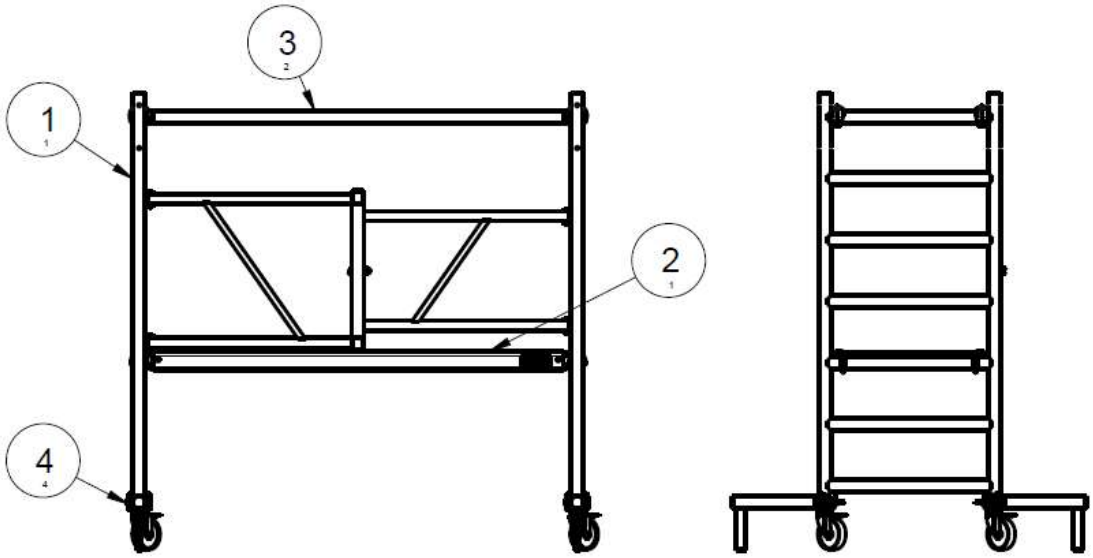

Assembly Table – Folding Scaffold 0.8 m *()**

			Platform Size (m*m)	1,8x0,7	1,8x1,3	2,5x0,7	2,5x1,3
Nr.	Description	Article number	Kg				
1	Foldy 1785 x 690	9501.770.010	22,4	1			
1	Foldy 1785 x 1300	9501.770.030	23,2		1		
1	Foldy 2500 x 690	9501.770.020	29,9			1	
1	Foldy 2500 x 1300	9501.770.040	30,7				1
2	Platform 1785	9501.316.010	12	1	1		
2	Platform 2500	9501.316.020	16,6			1	1
3	Horizontal 1785	9501.200.058CR	2,2	2	2		
3	Horizontal 2500	9501.200.030CR	2,8			2	2
4	Foldy small outrigger	9501.770.105	1,1	4	4	4	4

* Provided that the risk assessment indicates that, in this specific situation, omitting the toe boards does not pose any risk to the user or the surroundings.

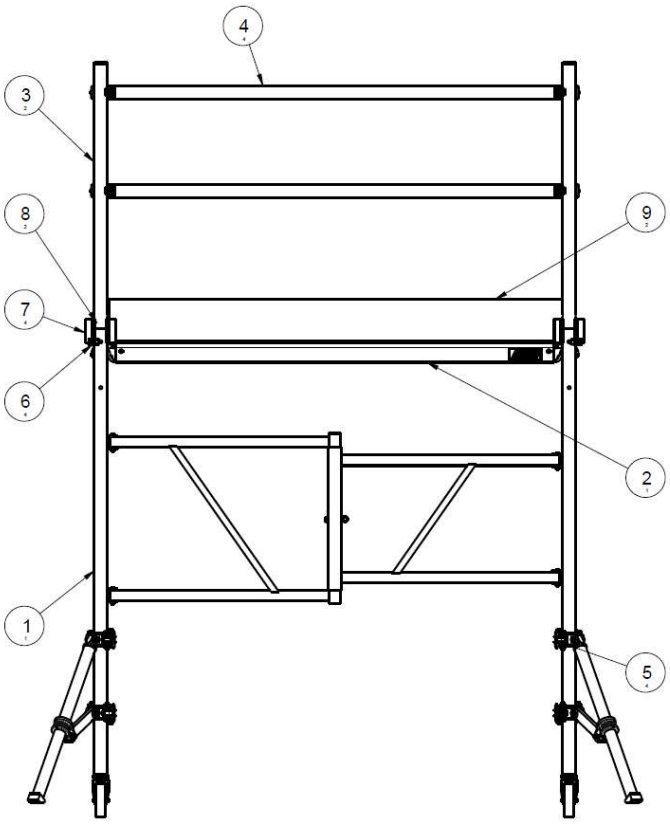

Composition table folding scaffold 1.8m Foldy with end railings

		Platform size (m*m)		1,8x0,7	1,8x1,3	2,5x0,7	2,5x1,3
Nr.	Description	Article number	Kg				
1	Foldy 1785 x 690	9501.770.010	22,4	1			
1	Foldy 1785 x 1300	9501.770.030	23,2		1		
1	Foldy 2500 x 690	9501.770.020	29,9			1	
1	Foldy 2500 x 1300	9501.770.040	30,7				1
2	Platform 1785	9501.316.015	12	1	1		
2	Platform 2500	9501.316.025	16,6			1	1
3	Foldy end guardrail 690	9501.720.001	3,6	2	2		
3	Foldy end guardrail 1300	9501.720.002	4,7			2	2
4	Horizontal 1785	9501.200.058CR	2,2	4	4		
4	Horizontal 2500	9501.200.030CR	2,8			4	4
5	Foldy large outrigger	9501.770.100	3,0	4	4	4	4
6	Locking pin	9501.410.162	0,1	4	4	4	4
7	Toe board holder	9501.800.089	2,0	4	4	4	4
8	Toe board 690	9501.200.092	1,9	2		2	
8	Toe board 1300	9501.200.090	3,8		2		2
9	Toe board 1785	9501.200.086	5,4	2	2		
9	Toe board 2500	9501.200.080	7,7			2	2

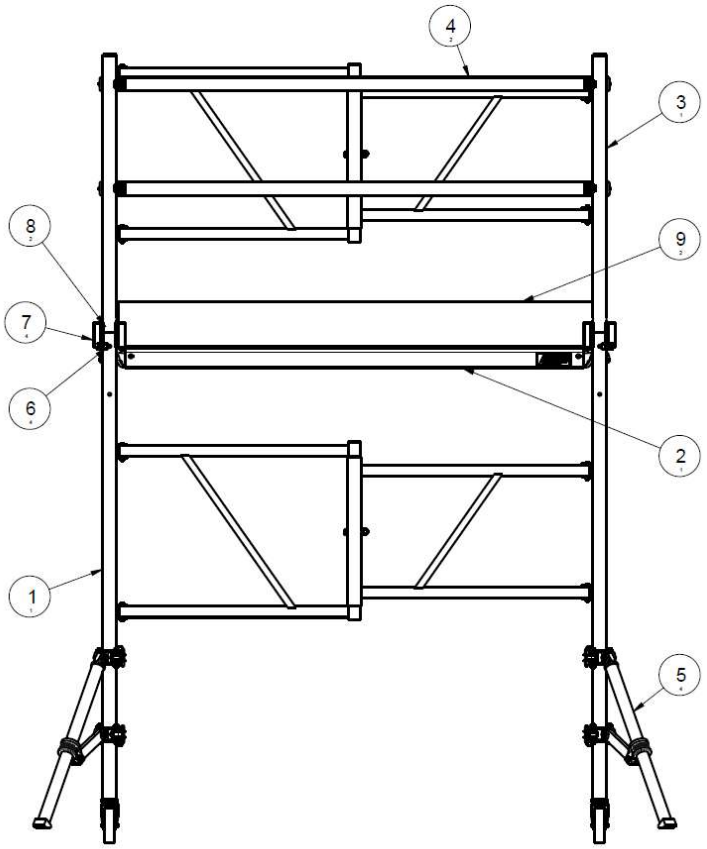

Assembly Table – Folding Scaffold 1.8 m Foldy with Folding Guardrail ()*

Nr.	Description	Article number	Kg	Quantity
1	Foldy 1785 x 690	9501.770.010	22,4	1
2	Platform 1785	9501.316.015	12	1
3	Folding Guardrail 1785 x 690	9501.770.060	10,8	1
4	Horizontal 1785	9501.200.058CR	2,2	2
5	Foldy large outrigger	9501.770.100	3,0	4
6	Locking pen	9501.410.162	0,1	4
7	Toe board holder	9501.800.089	2,0	4
8	Toe board 690	9501.200.092	1,9	2
9	Toe board 1785	9501.200.086	5,4	2

* Only available in platform size 1.8 × 0.7

Custers Hydraulica B.V.
Smakterweg 33
5804 AE Venray
The Netherlands
Tel. +31 (0) 47 85 53 000
E-mail: info@custers.nl
Website: www.custers.nl